Order this document
by MRF313/D

The RF Line
NPN Silicon High-Frequency Transistor

. . . designed for wideband amplifier, driver or oscillator applications in military, mobile, and aircraft radio.

- Specified 28 Volt, 400 MHz Characteristics —
  Output Power = 1.0 Watt
  Power Gain = 15 dB Min
  Efficiency = 45% Typ
- Emitter Ballast and Low Current Density for Improved MTBF
- Common Emitter for Improved Stability

MRF313

1.0 W, 400 MHz
HIGH–FREQUENCY
TRANSISTOR
NPN SILICON

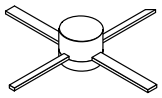

CASE 305A–01, STYLE 1

MAXIMUM RATINGS

Rating	Symbol	Value	Unit
Collector–Emitter Voltage	V_{CEO}	30	Vdc
Collector–Base Voltage	V_{CBO}	40	Vdc
Emitter–Base Voltage	V_{EBO}	3.0	Vdc
Collector Current — Continuous	I_C	150	mAdc
Total Device Dissipation @ T_C = 25°C Derate above 25°C	P_D	6.1 35	Watts mW/°C
Storage Temperature Range	T_{stg}	–65 to +150	°C

THERMAL CHARACTERISTICS

Characteristic	Symbol	Max	Unit
Thermal Resistance, Junction to Case	$R_{\theta JC}$	28.5	°C/W

ELECTRICAL CHARACTERISTICS (T_C = 25°C unless otherwise noted.)

Characteristic	Symbol	Min	Typ	Max	Unit
OFF CHARACTERISTICS					
Collector–Emitter Breakdown Voltage (I_C = 10 mAdc, I_B = 0)	$V_{(BR)CEO}$	30	—	—	Vdc
Collector–Emitter Breakdown Voltage (I_C = 5.0 mAdc, V_{BE} = 0)	$V_{(BR)CES}$	35	—	—	Vdc
Collector–Base Breakdown Voltage (I_C = 0.1 mAdc, I_E = 0)	$V_{(BR)CBO}$	35	—	—	Vdc
Emitter–Base Breakdown Voltage (I_E = 1.0 mAdc, I_C = 0)	$V_{(BR)EBO}$	3.0	—	—	Vdc
Collector Cutoff Current (V_{CE} = 20 Vdc, I_B = 0)	I_{CEO}	—	—	1.0	mAdc

(continued)

© Motorola, Inc. 1994

ELECTRICAL CHARACTERISTICS — continued (T_C = 25°C unless otherwise noted.)

Characteristic	Symbol	Min	Typ	Max	Unit
ON CHARACTERISTICS					
DC Current Gain (I_C = 100 mAdc, V_{CE} = 10 Vdc)	h_{FE}	20	60	150	—
DYNAMIC CHARACTERISTICS					
Current–Gain — Bandwidth Product (I_C = 100 mAdc, V_{CE} = 20 Vdc, f = 200 MHz)	f_T	—	2.5	—	GHz
Output Capacitance (V_{CB} = 28 Vdc, I_E = 0, f = 1.0 MHz)	C_{ob}	—	3.5	5.0	pF
FUNCTIONAL TESTS					
Common–Emitter Amplifier Power Gain (1) (V_{CC} = 28 Vdc, P_{out} = 1.0 W, f = 400 MHz)	G_{pe}	15	16	—	dB
Collector Efficiency (V_{CC} = 28 Vdc, P_{out} = 1.0 W, f = 400 MHz)	η	—	45	—	%
Series Equivalent Input Impedance (V_{CC} = 28 Vdc, P_{out} = 1.0 W, f = 400 MHz)	Z_{in}	—	6.4 – j4.8	—	Ohms
Series Equivalent Output Impedance (V_{CC} = 28 Vdc, P_{out} = 1.0 W, f = 400 MHz)	Z_{out}	—	75 – j45	—	Ohms

NOTE:
1. Class C

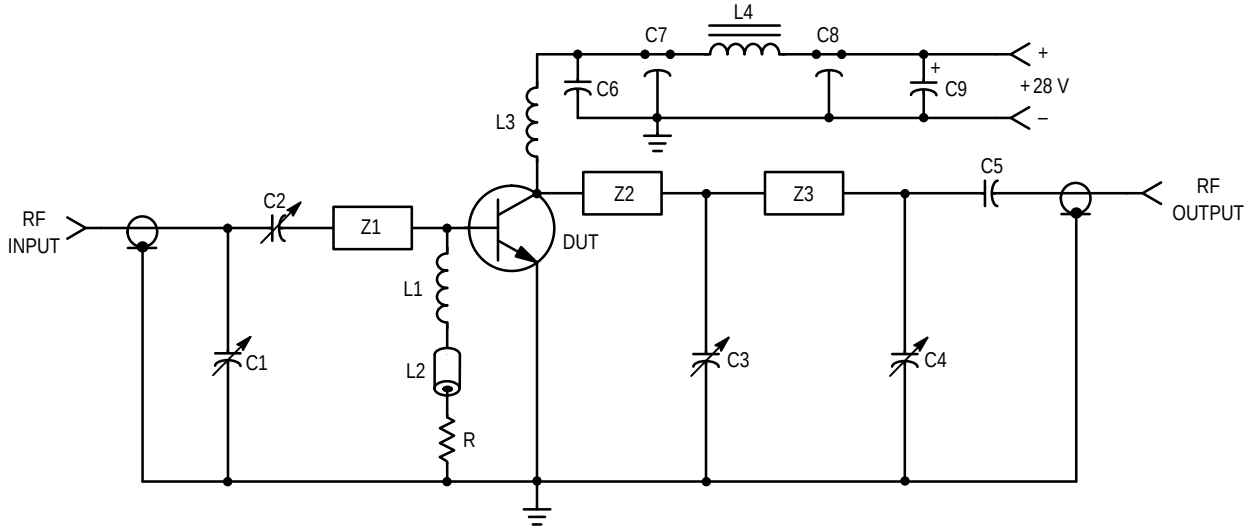

C1, C2, C4 — 1.0–20 pF JOHANSON 9063
C3 — 1.0–10 pF JOHANSON
C5 — 150 pF Chip
C6 — 0.1 µF
C7, C8 — 680 pF Feedthru
C9 — 1.0 µF TANTALUM

L1, L3 — 5 Turns, AWG #20, 1/4″ I.D.
L2 — Ferrite Bead, FERROXCUBE No. 56–590–65/4B
L4 — FERROXCUBE VK200–20/4B
Input/Output Connectors — Type N
Board — Glass Teflon, ε = 2.56, t = 0.062″

R — 4.7 Ohms, 1/4 W
Z1 — 2.0″ x 0.1″ MICROSTRIP LINE
Z2, Z3 — 2.6″ x 0.1″ MICROSTRIP LINE

Figure 1. 400 MHz Power Gain Test Circuit

PACKAGE DIMENSIONS

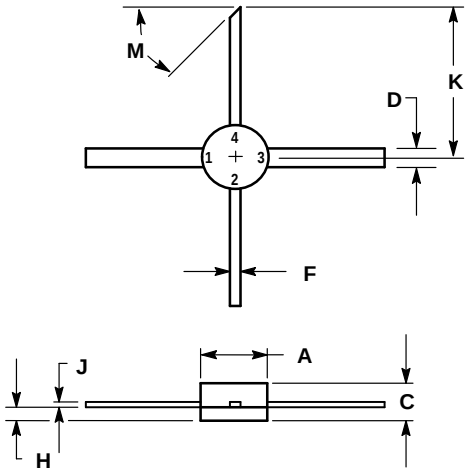

NOTES:
1. DIMENSIONING AND TOLERANCING PER ANSI Y14.5M, 1982.
2. CONTROLLING DIMENSION: INCH.

	INCHES		MILLIMETERS	
DIM	MIN	MAX	MIN	MAX
A	0.200	0.220	5.08	5.59
C	0.095	0.130	2.41	3.30
D	0.055	0.065	1.40	1.65
F	0.025	0.035	0.64	0.89
H	0.040	0.050	1.02	1.27
J	0.003	0.007	0.08	0.18
K	0.435	—	11.05	—
M	45 °REF		45 °REF	

STYLE 1:
PIN 1. EMITTER
2. BASE
3. EMITTER
4. COLLECTOR

CASE 305A–01
ISSUE A

Motorola reserves the right to make changes without further notice to any products herein. Motorola makes no warranty, representation or guarantee regarding the suitability of its products for any particular purpose, nor does Motorola assume any liability arising out of the application or use of any product or circuit, and specifically disclaims any and all liability, including without limitation consequential or incidental damages. “Typical” parameters can and do vary in different applications. All operating parameters, including “Typicals” must be validated for each customer application by customer’s technical experts. Motorola does not convey any license under its patent rights nor the rights of others. Motorola products are not designed, intended, or authorized for use as components in systems intended for surgical implant into the body, or other applications intended to support or sustain life, or for any other application in which the failure of the Motorola product could create a situation where personal injury or death may occur. Should Buyer purchase or use Motorola products for any such unintended or unauthorized application, Buyer shall indemnify and hold Motorola and its officers, employees, subsidiaries, affiliates, and distributors harmless against all claims, costs, damages, and expenses, and reasonable attorney fees arising out of, directly or indirectly, any claim of personal injury or death associated with such unintended or unauthorized use, even if such claim alleges that Motorola was negligent regarding the design or manufacture of the part. Motorola and Ⓜ are registered trademarks of Motorola, Inc. Motorola, Inc. is an Equal Opportunity/Affirmative Action Employer.

Literature Distribution Centers:
USA: Motorola Literature Distribution; P.O. Box 20912; Phoenix, Arizona 85036.
EUROPE: Motorola Ltd.; European Literature Centre; 88 Tanners Drive, Blakelands, Milton Keynes, MK14 5BP, England.
JAPAN: Nippon Motorola Ltd.; 4-32-1, Nishi-Gotanda, Shinagawa-ku, Tokyo 141, Japan.
ASIA PACIFIC: Motorola Semiconductors H.K. Ltd.; Silicon Harbour Center, No. 2 Dai King Street, Tai Po Industrial Estate, Tai Po, N.T., Hong Kong.